General Information (All ERV Models)

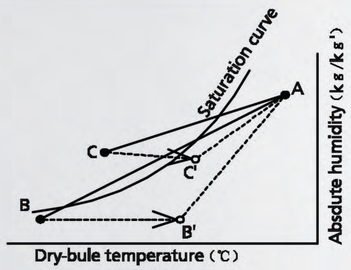

As shown in the figure to the left, suppose a high temperature absorbing air condition A and a low temperature absorbing air condition B are ploted on the air line figure, then a high temperature air A is heat-exchanged by the unit and goes out of the saturation curve as shown by Point C. In this case, the unit will be dewed or frosted. To avoid this, you are required to heat a low temperature air B up to B' so as to get C' below the saturation curve, before using the unit.

Use conditions	
Outdoor air range	- Temperature range -10℃ ~ 40℃ Relative humidity 85% or less
Indoor air range	- Temperature range -10℃ ~ 40℃ Relative humidity 85% or less
Installation requirements	
Same as the indoor air conditions	
*Indoor air here means air in air-conditioned living rooms. Its use in refrigerators or other places where temperature can fluctuate greatly is prohibited even if a temperature range is acceptable.	
Example Indoor air conditions	
During cooling period	- Temperature 27℃ Relative humidity 50%
During heating period	- Temperature 20℃ Relative humidity 40%

Installation Diagram (for Slim Series)

■ **Installation Diagram (Standard Model)**

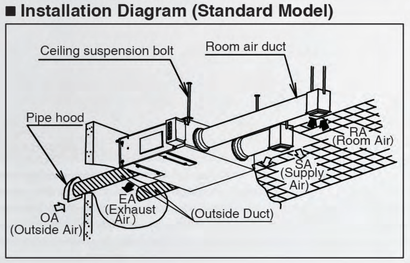

■ **Installation Diagram (L Model)**

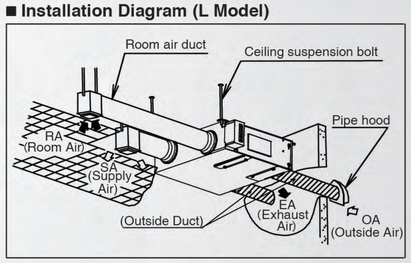

Panasonic®

Panasonic Ecology Systems Co., Ltd.
http://www.plshk.panasonic.hk/

- Specifications are subject to change without prior notice
- Actual colors may vary slightly from shown.

CATALOG NO: P-ERV005
Printed in Hong Kong 03.19

Panasonic

ENERGY RECOVERY VENTILATOR

Indoor Air Quality + Energy Saving

Energy recovery ventilator ensures proper air exchange between indoors and outdoors for indoor air quality. It also minimizes the energy consumption through heat exchange process by the heat exchange element inside.

DON’T YOU WANT TO LIVE WITH CLEAR AIR?

Buildings nowadays mostly are tightly built with aluminum casing windows and rubber lining door to retain energy efficiency and limit heating or cooling loss. However, it comes at the cost of poor indoor air quality.

In order to provide a healthy living environment to you, ventilation plays an essential role.

WHY INDOOR AIR QUALITY IS IMPORTANT?

You can't see it, but you take a lot into your body – AIR

Air quality in a house is an important factor for your health and comfort. In general, windows are not opened in airtight house due to using of air conditioning.

It is difficult to fulfill air exchange in a modern house, as a result, the stale indoor air becomes polluted easily.

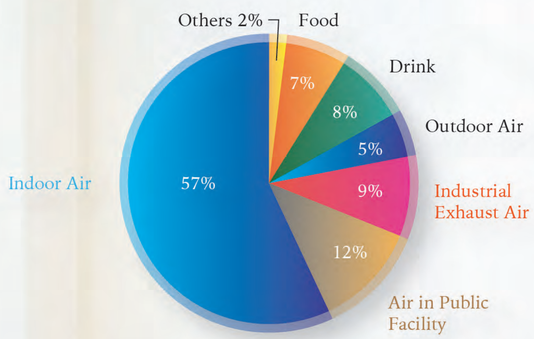

Source: Murakami Shuzo, "Indoor Environments and Air Pollutants"

Besides "Sick House Syndrome", insufficient ventilation also affects human’s health and aging of building

- Yellow stain on wall caused by tobacco smoking
- Allergic illnesses induced with mold and mite that are caused by moisture
- Discomfort due to smells from toilet and cooking
- Lowering of concentration due to shortage of oxygen
- Building deterioration resulting from condensation and mold

AIR PROBLEMS IN HOME

Home Airtightness

Homes designed and built in recent years are more airtight and energy efficient than in the past. To obtain an airtight design, house wraps, newly designed windows and doors, sealing caulks and other insulating materials are used to create a seal for optimum energy efficiency. It results the cost saving to heat and air-condition at home, but pollutants retained in airtight buildings can be hazardous to our health and can jeopardize structural integrity.

House Built in Past

Natural and wooden building material are adopted that allow air exchange between interior and exterior

House Built Nowadays

Chemical made building material and sashes are employed to ensure high airtightness

Issues Raised with Home Airtightness?

Highly airtight house restricts air ingress from outside that can closely retain the expected indoor temperature for energy saving. However, airtightness also brings out the problem of indoor air quality (IAQ) which may be a cause of sick house syndrome.

CONVENIENT

3 easy and convenient innovations

PANASONIC INNOVATIVE

SLIM DESIGN

Example: Slim Series

With 24-hour continuous ventilation, fresh air will circulate around the whole house. As ventilation with energy recovery ventilator, energy loss of air conditioning (including sensible heat and latent heat) is minimized. This provides a highly efficient, energy saving ventilated environment.

Enjoy Double Comfort with Interlocking Air Conditioning

The newly developed energy recovery ventilator can interlock air conditioning. It allows you to enjoy both fresh air and comfortable temperature.

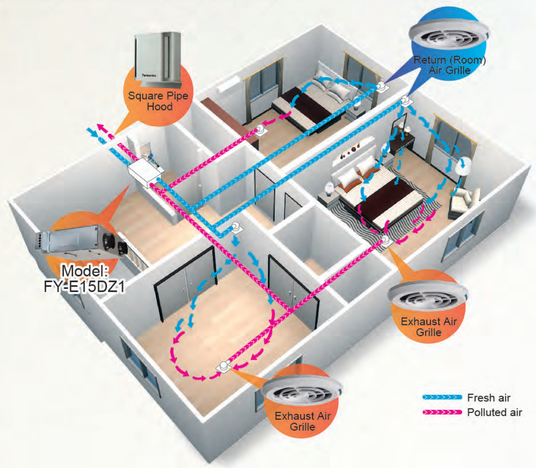

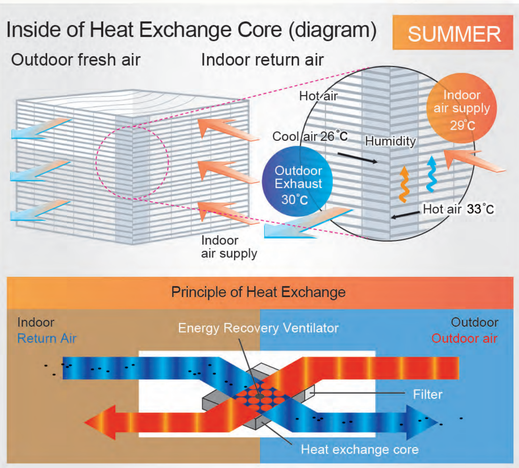

Convenient Installation and Maintenance

Side maintenance opening is only 450 x 450mm, that saves installation space and allows easy inspection for filter, element, as well as terminal box.

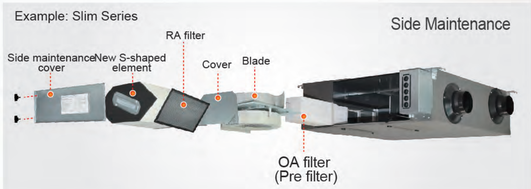

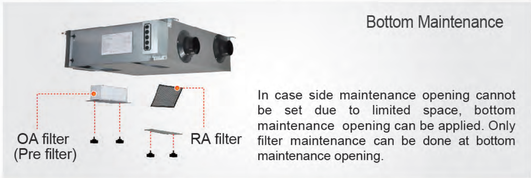

Multiple ways of installation

horizontally hanging or vertically mounting

- ***Slim Series***
  The new energy recovery ventilator of the heat exchange device can be installed onto the ceiling or wall, so from now on installation and maintenance will not be a problem.

View at Wall Ceiling

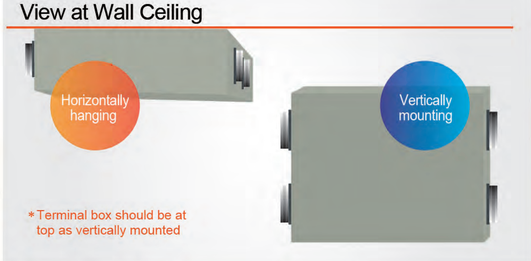

- ***Standard Series***
  The units can be mounted in reverse position.

REFRESH

Whole house filled with fresh air

24-Hour Continuous

With 24-hour continuous ventilation, stale air is exhausted while fresh air is enters into the house. Circulation of fresh air throughout the whole house is maintained.

Structure Diagram

Example: Slim Series

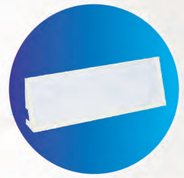

Recommended to change filter every year and clean every month

Pre Filter

Filter outdoor large dust particles and insects

Pre Filter

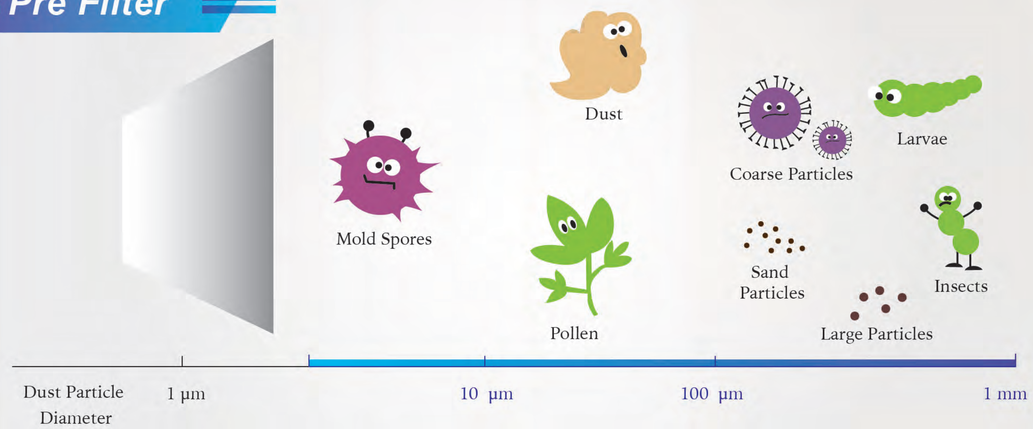

Bypass Ventilation for Speedy Exhaust of Polluted Air

Diversion damper is equipped for Bypass Ventilation. Return (room) airflow (RA) is greater than supply airflow (SA) allowing speedy exhaust of indoor polluted air.
By using bypass ventilation during season change, it will be more comfortable and energy saving.

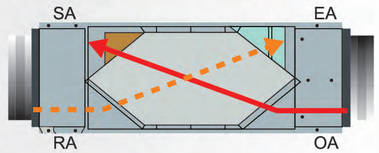

[Heat Exchange Mode]

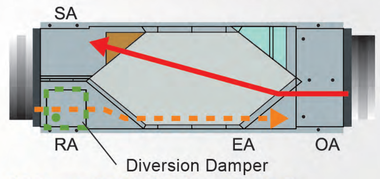

[Normal Ventilation Mode]

- Bypass ventilation
- * In case outdoor air is highly polluted, it is not recommended to use bypass ventilation. It may cause negative pressure that polluted outdoor air may ingress into the houses through the gaps at the doors and windows.

COST EFFICIENT

Considerate Design for Extra Saving

Merit of Energy Recovery Ventilation

Highly efficient energy recovery reduce energy loss during ventilation, that achieve energy saving (Example: FY-E15DZ1)

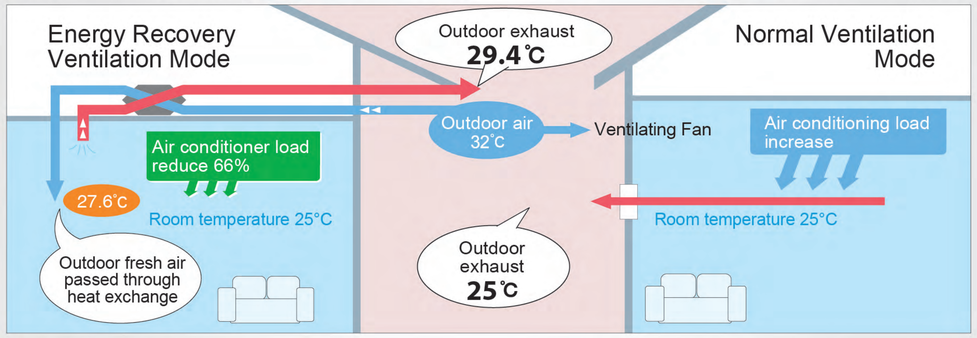

Summer

Utilize energy of indoor return cool air to cool down outdoor air before intake to indoor, indoor cool loss is reduced

Long Term Cost Comparison

Long term cost comparison for Panasonic ventilation fan and energy recovery ventilator

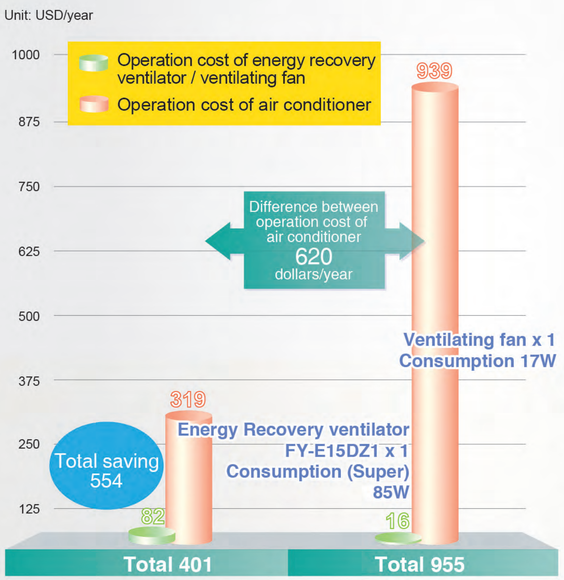

Based on the following condition

[Test condition] Location: Indonesia

- Indoor : Cooling 25°C (RH50%)
- Outdoor : 32°C (RH72%)
- Ventilation air volume: 100m² x 3m x 0.5 times/h = 150m³/h
- Operation Time
  Air Conditioner: 12 hrs/day x 365 days = 4380 hrs
  Ventilation: 24 hrs/day x 365 days = 8760 hrs
- Electricity charge: USD0.11/KW.h

※Since energy recovery ventilator can reduce ventilation load, cooling and heating load of air conditioner are decreased subsequently. Thus the initial equipment cost for air conditioner can be possibly reduced.

PRODUCT LINEUP

SLIM SERIES

Feature

- Counter-flow heat-exchange element used for reduced noise and more compact and slim body shape
- All maintenance can be performed through a single inspection hole
- Equipped with a Extra- High setting
- Bypass ventilation available for speedy exhaust
- Horizontal or vertical mounting available
- Interlock with air conditioning available

STANDARD SERIES

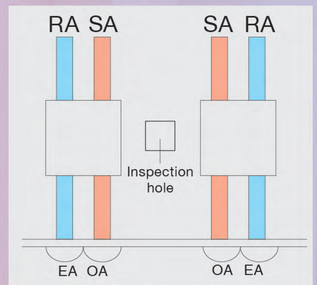

Units installed in reverse positions

Feature

- All maintenance can be performed through a single inspection hole
- Straight air supply/exhaust system used for easier installation
- Each unit can be mounted in reverse position
- Equipped with a Extra-High setting
- Can incorporate a medium-performance filter (optional, installed at site)
- Bypass ventilation available for speedy exhaust

PRODUCT SPECIFICATION

FY-E15DZ1
FY-E15DZ1L

■ Maintenance Dimension

It must be set the maintenance cover, and clean the filter and heat exchange core as specified in instruction.

● Product Dimension (Unit: mm)

*1.Dimension of filter maintenance cover.
*2.Dimension of maintenance cover.
*3.Suspension point dimension.

No.	Part name	Qty	Material
1	Frame	1	Galvanized Steel Sheet
2	Adapter	4	ABS
3	Impeller	2	PP
4	Fan Motor	1	
5	Heat Exchange Core	1	Special Paper and Resin
6	Outdoor Filter	1	Non-woven Cloth
7	Return Filter	1	
8	Ceiling Suspension	4	Galvanized Steel sheet
9	Switch Box	1	Galvanized Steel sheet

• FY-E15DZ1

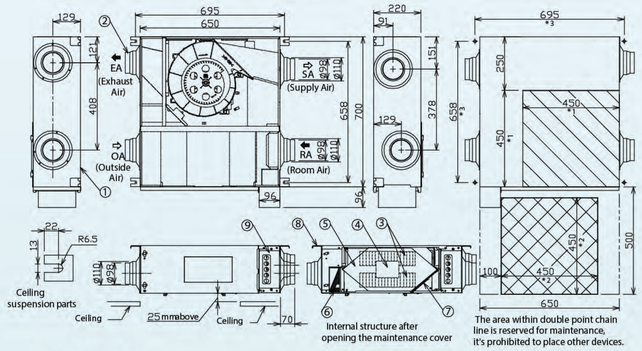

• FY-E15DZ1L

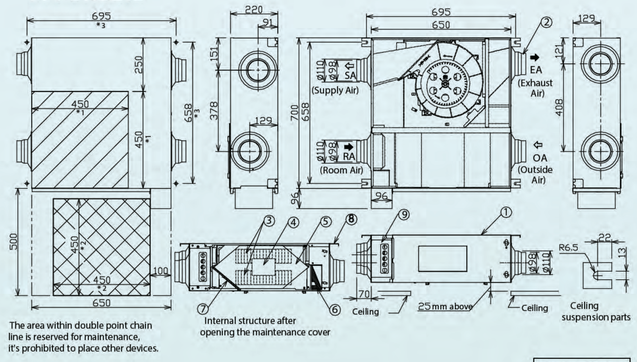

■ Performance P-Q Curve

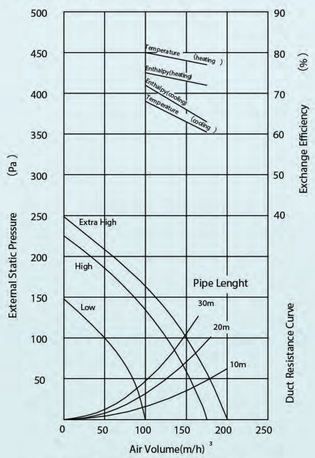

When friction coefficient of pipe (duct) λ=0.02

1. Duct size (Nominal Diameter):Ø100.
2. The above dimensions do not include the thickness of the insulation material in the unit.

■ Be careful of dew and frost

1. The two outside ducts must be insulated to prevent condensation.
   (Material: Glass wool. Thickness: 25mm)
2. Outside air may come into the room in cold area and place where outside air speed is high.
3. In order to prevent the water from ingessing, install the two outside ducts inclined to outside.

■ Specification

FY-E15DZ1
FY-E15DZ1L

Power Source	Notch	Heat Exchange Ventilation									Product Weight [kg]
		Input [W]	Current [A]	Air Volume (m^3/h)	External Static Pressure [Pa]	Temperature Exchange Efficiency [%]		Enthalpy Exchange Efficiency [%]		Noise [dB(A)]	
						Cooling	Heating	Cooling	Heating		
220V ~ 50Hz	Extra High	85	0.39	150	100	63	78	66	73	28	27
	High	79	0.36	150	55	63	78	66	73	28	
	Low	45	0.20	100	0	68	80	72	75	22	

1.The input power, the current and the exchange efficiency are measured at the standard air volume.
2.The noise is measured 1.5m away from the underface of the unit.
The noise value measured at the total acoustic room is more than the indicated value in actual operation because it's affected by enviroment.
3.The above parameters are tested according to standard JIS B 8628.

FY-E25DZ1
FY-E25DZ1L

■ Maintenance Dimension

It must be set the maintenance cover, and clean the filter and heat exchange core as specified in instruction.

● Product Dimension (Unit: mm)

*1.Dimension of filter maintenance cover.
*2.Dimension of maintenance cover.
*3.Suspension point dimension.

No.	Part name	Qty	Material
1	Frame	1	Galvanized Steel Sheet
2	Adapter	4	ABS
3	Impeller	2	PP
4	Fan Motor	1	
5	Heat Exchange Core	1	Special Paper and Resin
6	Outdoor Filter	1	Non-woven Cloth
7	Return Filter	1	
8	Ceiling Suspension	4	Galvanized Steel sheet
9	Switch Box	1	Galvanized Steel sheet

• FY-E25DZ1

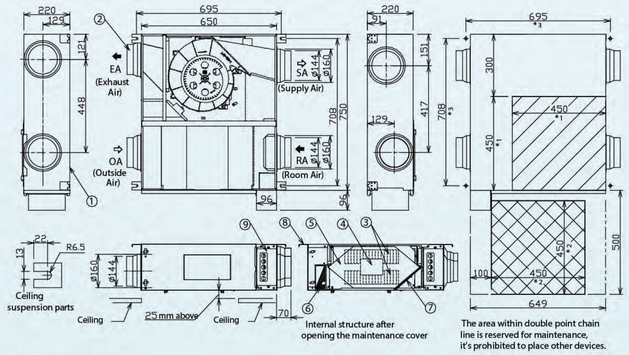

• FY-E25DZ1L

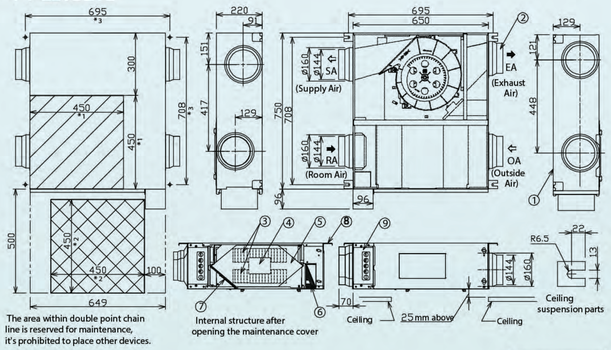

■ Performance P-Q Curve

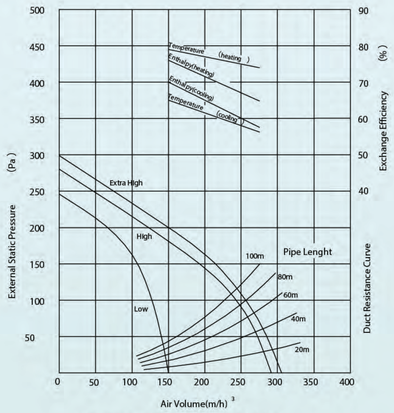

When friction coefficient of pipe (duct) λ=0.02

1. Duct size (Nominal Diameter):Ø150.
2. The above dimensions do not include the thickness of the insulation material in the unit.

■ Be careful of dew and frost

1. The two outside ducts must be insulated to prevent condensation.
   (Material: Glass wool. Thickness: 25mm)
2. Outside air may come into the room in cold area and place where outside air speed is high.
3. In order to prevent the water from ingessing, install the two outside ducts inclined to outside.

■ Specification

FY-E25DZ1
FY-E25DZ1L

Power Source	Notch	Heat Exchange Ventilation									Product Weight [kg]
		Input [W]	Current [A]	Air Volume (m^3/h)	External Static Pressure [Pa]	Temperature Exchange Efficiency [%]		Enthalpy Exchange Efficiency [%]		Noise [dB(A)]	
						Cooling	Heating	Cooling	Heating		
220V ~ 50Hz	Extra High	125	0.59	250	115	58	75	60	67	32	30
	High	113	0.51	250	95	58	75	60	67	32	
	Low	81	0.39	150	0	65	79	70	76	25	

1.The input power, the current and the exchange efficiency are measured at the standard air volume.
2.The noise is measured 1.5m away from the underface of the unit.
The noise value measured at the total acoustic room is more than the indicated value in actual operation because it's affected by enviroment.
3.The above parameters are tested according to standard JIS B 8628.

FY-E35DZ1
FY-E35DZ1L

■ Maintenance Dimension
It must be set the maintenance cover, and clean the filter and heat exchange core as specified in instruction.

● Product Dimension (Unit: mm)

*1.Dimension of filter maintenance cover.
*2.Dimension of maintenance cover.
*3.Suspension point dimension.

No.	Part name	Qty	Material
1	Frame	1	Galvanized Steel Sheet
2	Adapter	4	ABS
3	Impeller	2	PP
4	Fan Motor	1	
5	Heat Exchange Core	1	Special Paper and Resin
6	Outdoor Filter	1	Non-woven Cloth
7	Return Filter	1	
8	Ceiling Suspension	4	Galvanized Steel sheet
9	Switch Box	1	Galvanized Steel sheet

• FY-E35DZ1

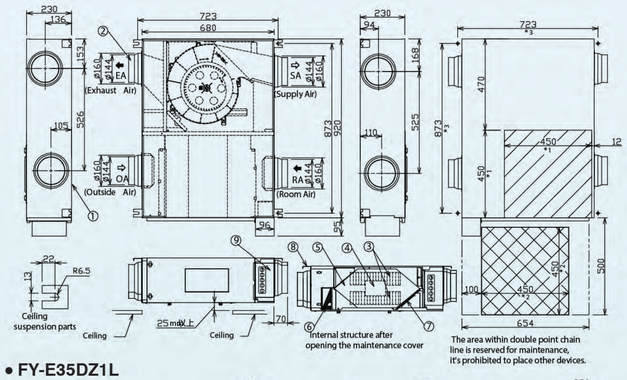

• FY-E35DZ1L

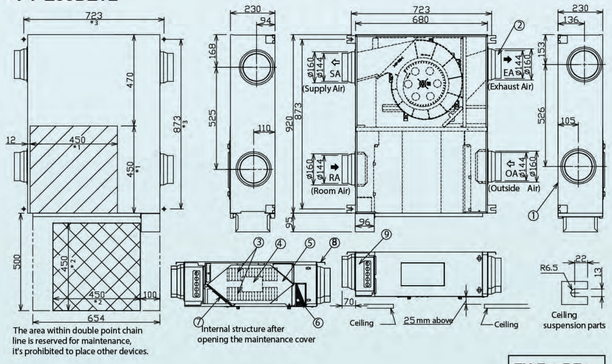

■ Performance P-Q Curve

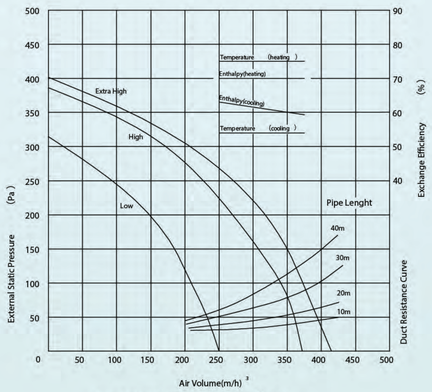

When friction coefficient of pipe (duct) λ=0.02

1. Duct size (Nominal Diameter):Ø150.
2. The above dimensions do not include the thickness of the insulation material in the unit.

■ Be careful of dew and frost

1. The two outside ducts must be insulated to prevent condensation.
   (Material: Glass wool. Thickness: 25mm)
2. Outside air may come into the room in cold area and place where outside air speed is high.
3. In order to prevent the water from ingessing, install the two outside ducts inclined to outside.

■ Specification

FY-E35DZ1
FY-E35DZ1L

Power Source	Notch	Heat Exchange Ventilation									Product Weight [kg]
		Input [W]	Current [A]	Air Volume (m^3/h)	External Static Pressure [Pa]	Temperature Exchange Efficiency [%]		Enthalpy Exchange Efficiency [%]		Noise [dB(A)]	
						Cooling	Heating	Cooling	Heating		
220V ~ 50Hz	Extra High	225	1.02	350	150	54	75	60	70	36	39
	High	209	0.95	350	85	54	75	60	70	36	
	Low	150	0.68	250	0	54	75	63	70	30	

1.The input power, the current and the exchange efficiency are measured at the standard air volume.
2.The noise is measured 1.5m away from the underface of the unit.
The noise value measured at the total acoustic room is more than the indicated value in actual operation because it's affected by enviroment.
3.The above parameters are tested according to standard JIS B 8628.

FY-E50DZ1
FY-E50DZ1L

■ Maintenance Dimension
It must be set the maintenance cover, and clean the filter and heat exchange core as specified in instruction.

● Product Dimension (Unit: mm)

*1.Dimension of filter maintenance cover.
*2.Dimension of maintenance cover.
*3.Suspension point dimension.

No.	Part name	Qty	Material
1	Frame	1	Galvanized Steel Sheet
2	Adapter	4	ABS
3	Impeller	2	PP
4	Fan Motor	1	
5	Heat Exchange Core	2	Special Paper and Resin
6	Outdoor Filter	2	Non-woven Cloth
7	Return Filter	2	
8	Ceiling Suspension	4	Galvanized Steel sheet
9	Switch Box	1	Galvanized Steel sheet

• FY-E50DZ1

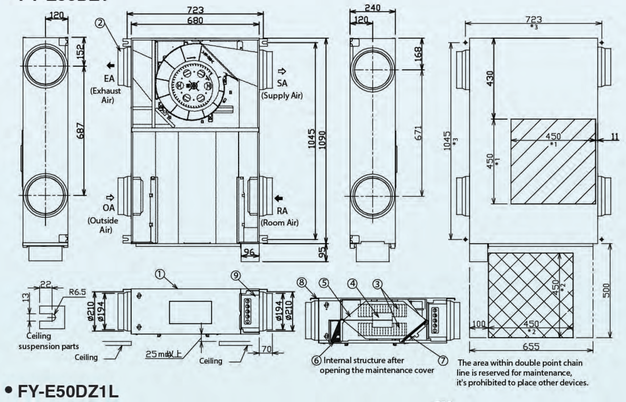

• FY-E50DZ1L

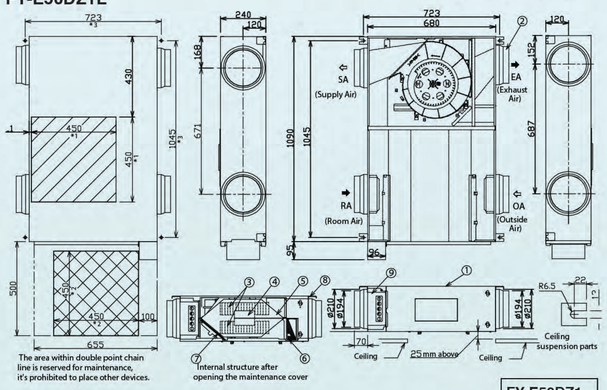

■ Performance P-Q Curve

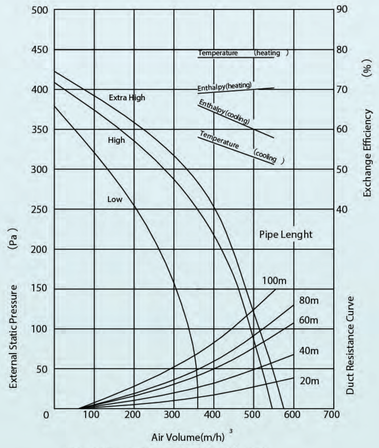

When friction coefficient of pipe (duct) λ=0.02

1. Duct size (Nominal Diameter):Ø200.
2. The above dimensions do not include the thickness of the insulation material in the unit.

■ Be careful of dew and frost

1. The two outside ducts must be insulated to prevent condensation.
   (Material: Glass wool. Thickness: 25mm)
2. Outside air may come into the room in cold area and place where outside air speed is high.
3. In order to prevent the water from ingessing, install the two outside ducts inclined to outside.

■ Specification

FY-E50DZ1
FY-E50DZ1L

Power Source	Notch	Heat Exchange Ventilation									Product Weight [kg]
		Input [W]	Current [A]	Air Volume (m^3/h)	External Static Pressure [Pa]	Temperature Exchange Efficiency [%]		Enthalpy Exchange Efficiency [%]		Noise [dB(A)]	
						Cooling	Heating	Cooling	Heating		
220V ~ 50Hz	Extra High	315	1.43	500	120	53	78	60	70	37	45
	High	288	1.31	500	85	53	78	60	70	37	
	Low	210	0.95	360	0	58	78	66	69	31	

1.The input power, the current and the exchange efficiency are measured at the standard air volume.
2.The noise is measured 1.5m away from the underface of the unit.
The noise value measured at the total acoustic room is more than the indicated value in actual operation because it's affected by enviroment.
3.The above parameters are tested according to standard JIS B 8628.

STANDARD SERIES

PRODUCT SPECIFICATION

FY-650ZDY8

No.	Parts Name	Qty.	
1	Frame	1	Galvanized sheets
2	Adapter	4	ABS
3	Electrical Equipment Box	1	
4	Inspection Cover	1	Galvanized sheets
5	Fan	2	ABS
6	Motor	2	
7	Heat Exchange Element	3	Special paper + Resin
8	Filter	2	Nylon-Polyester Fiber
9	Damper	1	
10	Damper Motor	1	
11	Ceiling Suspension Fixture	4	Galvanized sheets

● Performance

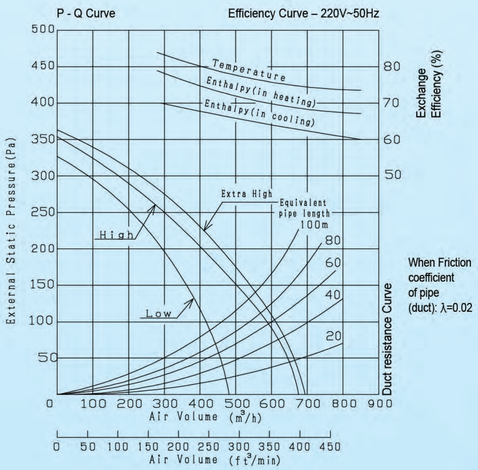

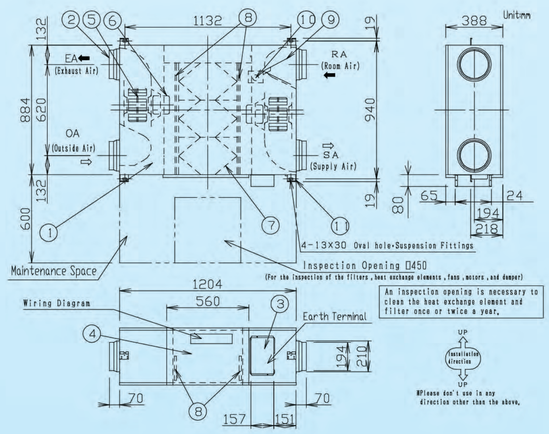

● Specifications

Model No	Power Source	Notch	Hz		Input [W]	Current [A]	Air Volume [m³/h]	External Static Pressure [Pa]	Temperature Exchange Efficiency (%)	Enthalpy Exchange Efficiency (%)		Noise [dB]	Product Weight [kg]
										Cooling	Heating		
FY-650ZDY8	220V 50Hz	Extra High	50	Heat Exchange Ventilation	326	1.45	650	65	75	62	68	36.5	68
				Normal Ventilation	326	1.45	650	65	-	-	-	36.5	
		High	50	Heat Exchange Ventilation	269	1.22	650	40	75	62	68	34.5	
				Normal Ventilation	269	1.22	650	40	-	-	-	35.0	
		Low	50	Heat Exchange Ventilation	200	0.88	460	40	79	66	73	30.0	
				Normal Ventilation	200	0.88	460	40	-	-	-	30.0	

＊ This noise of the product is the value which was measured at the acoustic room. Actually, in the established condition, that undergo influence by the echoing of the room and so that become bigger than the display numerical value.
The input, current and exchange efficiency are values at the time of mentioned air volume
The noise level shall be measured 1.5m below the center of the unit
The temperature exchange efficiency averages that of when cooling and when heating

FY-800ZDY8

No.	Parts Name	Qty.	
1	Frame	1	Galvanized sheets
2	Adapter	4	ABS
3	Electrical Equipment Box	1	
4	Inspection Cover	1	Galvanized sheets
5	Fan	2	ABS
6	Motor	2	
7	Heat Exchange Element	3	Special paper + Resin
8	Filter	2	Nylon-Polyester Fiber
9	Damper	1	
10	Damper Motor	1	
11	Ceiling Suspension Fixture	4	Galvanized sheets

● Performance

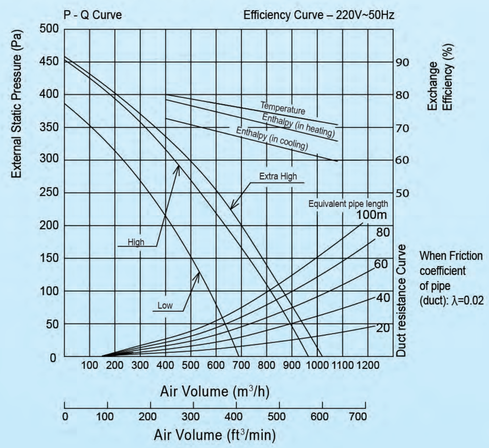

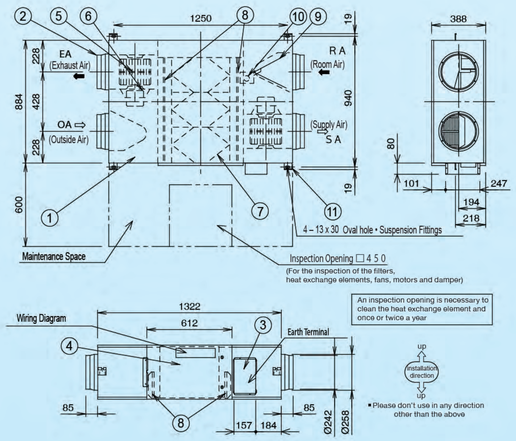

● Specifications

Model No	Power Source	Notch	Hz		Input [W]	Current [A]	Air Volume [m³/h]	External Static Pressure [Pa]	Temperature Exchange Efficiency (%)	Enthalpy Exchange Efficiency (%)		Noise [dB]	Product Weight [kg]
										Cooling	Heating		
FY-800ZDY8	220V 50Hz	Extra High	50	Heat Exchange Ventilation	387	1.74	800	140	75	65	71	37.0	71
				Normal Ventilation	387	1.74	800	140	-	-	-	37.0	
		High	50	Heat Exchange Ventilation	360	1.58	800	110	75	65	71	36.5	
				Normal Ventilation	360	1.58	800	110	-	-	-	36.5	
		Low	50	Heat Exchange Ventilation	293	1.23	630	55	76	68	74	33.5	
				Normal Ventilation	293	1.23	630	55	-	-	-	33.5	

＊ This noise of the product is the value which was measured at the acoustic room. Actually, in the established condition, that undergo influence by the echoing of the room and so that become bigger than the display numerical value.
The input, current and exchange efficiency are values at the time of mentioned air volume
The noise level shall be measured 1.5m below the center of the unit
The temperature exchange efficiency averages that of when cooling and when heating

STANDARD SERIES

PRODUCT SPECIFICATION

FY-01KZDY8A

No.	Parts Name	Qty.	
1	Frame	1	Galvanized sheets
2	Adapter	4	ABS
3	Electrical Equipment Box	1	
4	Inspection Cover	1	Galvanized sheets
5	Fan	2	ABS
6	Motor	2	
7	Heat Exchange Element	1	Special paper + Resin
8	Filter	2	Nylon-Polyester Fiber
9	Damper	1	
10	Damper Motor	1	
11	Ceiling Suspension Fixture	4	Galvanized sheets

● Performance

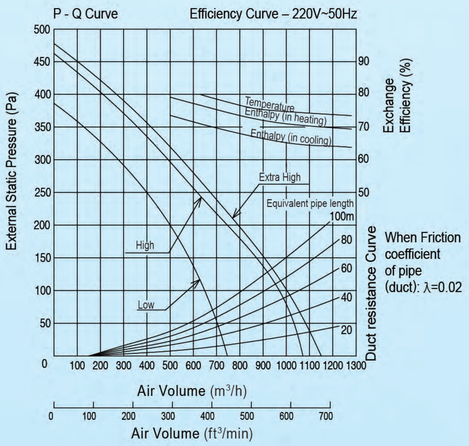

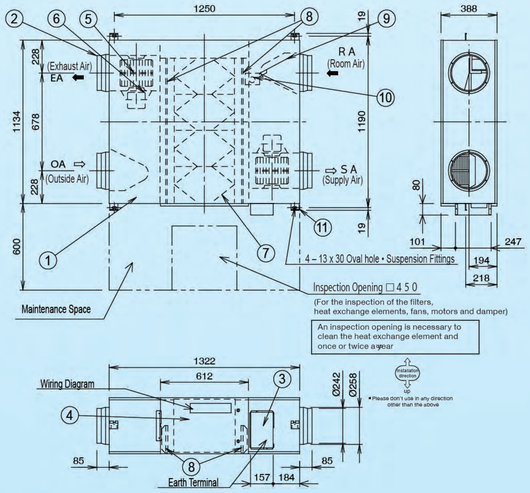

● Specifications

Model No	Power Source	Notch	Hz		Input [W]	Current [A]	Air Volume [m³/h]	External Static Pressure [Pa]	Temperature Exchange Efficiency (%)	Enthalpy Exchange Efficiency (%)		Noise [dB]	Product Weight [kg]
										Cooling	Heating		
FY-01KZDY8A	220V 50Hz	Extra High	50	Heat Exchange Ventilation	437	1.93	1,000	105	75	65	71	37.5	83
				Normal Ventilation	437	1.93	1,000	105	-	-	-	39.5	
		High	50	Heat Exchange Ventilation	416	1.80	1,000	80	75	65	71	37.0	
				Normal Ventilation	416	1.80	1,000	80	-	-	-	39.0	
		Low	50	Heat Exchange Ventilation	301	1.29	700	75	79	70	76	33.5	
				Normal Ventilation	301	1.29	700	75	-	-	-	35.5	

＊ This noise of the product is the value which was measured at the acoustic room. Actually, in the established condition, that undergo influence by the echoing of the room and so that become bigger than the display numerical value.
The input, current and exchange efficiency are values at the time of mentioned air volume
The noise level shall be measured 1.5m below the center of the unit
The temperature exchange efficiency averages that of when cooling and when heating

ACCESSORY

Wired Remote Controller

FY-EB90S1 (Applicable to Slim Series)

Power : 220V / 50Hz
Rated Wattage : 3.4W
Outer Size : 116mm x 120mm x 40mm

Unit : mm

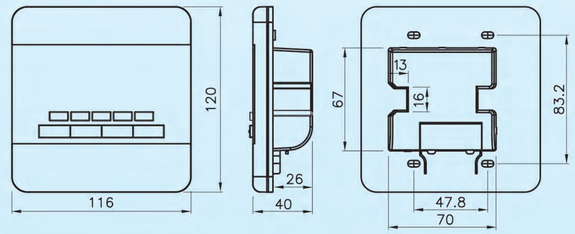

PIPE HOOD

- High strength – adopt 0.5mm thickness SUS 304 stain less steel
- Excellent anti-rust capability – hood part coated with metallic silver paint prevent oxidation of material
- Easy installation – 3pcs of spring clip facilitate duct / pipe connection
- 2.5mm x 2.5mm net keep out ingress of small particles and insects from outside (FV-MGX100P & FV-MGX150P)
- It is recommended to use pipe hood with net at intake terminal while without net at exhaust

With Net
FV-MGX100P
FV-MGX150P

Without Net
FV-MCX100P
FV-MCX150P

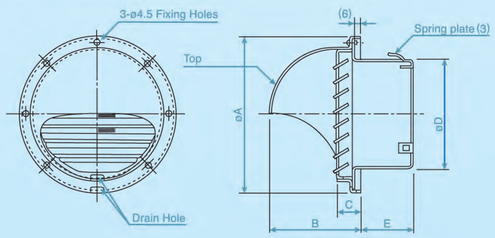

Unit : mm

Model No.	A	B	C	D	E
FV-MGX100P	141	79	20	97	48
FV-MGX150P	190	106	23	147	53
FV-MCX100P	141	79	20	97	48
FV-MCX150P	190	106	23	147	53

VENT CAP

- High strength – adopt 0.5mm thickness SUS 304 stain less steel
- Easy installation – 3pcs of spring clip facilitate duct / pipe connection
- 2.5mm x 2.5mm net keep out ingress of small particles and insects from outside (FV-VGX100P & FV-VGX150P)
- It is recommended to use vent cap with net at intake terminal while without net at exhaust

With Net
FV-VGX100P
FV-VGX150P

Without Net
FV-VCX100P
FV-VCX150P

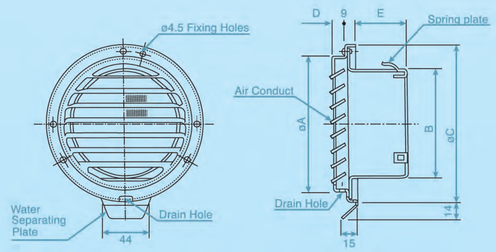

Unit : mm

Model No.	A	B	C	D	E
FV-VGX100P	120	97	145	13	47
FV-VGX150P	169	147	195	18	52
FV-VCX100P	120	97	145	13	47
FV-VCX150P	169	147	195	18	52